International Journal of Mechanical, Electrical and Civil Engineering
Volume. 1 No. 1 January 2024
e-ISSN : 3047-4531, and p-ISSN : 3047-4523, Page. 01-11
DOI: https://doi.org/10.61132/ijmecie.v1i3.51
Available online at: https://international.aritekin.or.id/index.php/IJMECIE

Sediment Volume Measuring Tool Using DYP-L04 Type Ultrasonic Sensor Based on Arduino Mega 2560 R3

Muhammad Rifky Aulia[1], Sri Arttini Dwi Prasetyowati[1], Bustanul Arifin[1], Slamet Imam Wahyudi[2], Floris Boogaard[3], Suhartono[1], Raditya Rahmat Wijaya[1]

[1] Electrical Engineering, Faculty of Industrial Technology, Universitas Islam Sultan Agung, Indonesia
[2] Civil Engineering, Faculty of Engineering, Universitas Islam Sultan Agung, Indonesia
[3] Hanze University of Applied Sciences, Groningen, The Netherlands

Author Correspondence : arttini@unissula.ac.id

Abstract. *Many rivers in Indonesia had very poor water clarity due to a mixture of dirt and mud in the water. Polluted rivers were often found in areas near settlements, where household waste that flowing into rivers made the water look dirty and turbid. Pollutants dissolved in water will bind to small particles and settle at the bottom of the river, due to sedimentation. This research designed a device to detect sediment volume in the rivers. This device used an ultrasonic sensor type DYP-L04 and a rotary encoder for calculating volume, with Arduino Mega 2560 R3 as a processor. There is a PG45 motor that was used to set the motor speed to be constant. This ultrasonic sensor works based on the Arduino programming algorithm that has been designed, so that the device can measure sediment volume optimally. The results of this research showed that the device could determine the volume of sediment with the average error score less than 10 %.*

Keywords *River sediment, Ultrasonic Sensors, Arduino*

1. INTRODUCTION

In Indonesia, polluted waters are often found around residential areas, where household waste is discharged into rivers, making the water appear dirty and cloudy. The water-soluble impurities eventually settle on the bottom of the water, causing sedimentation. Therefore, a tool is needed that can detect sedimentation in waters by measuring the height of sediment deposits underwater. Knowing the presence of sediment deposits at the bottom of the water makes it possible to take precautions so as not to cause unwanted impacts.

With technological advancements, especially in the field of electronics, it is possible to manufacture sedimentation volume measuring devices at the bottom of the water. These measurements are carried out automatically by a prototype ship equipped with an ultrasonic sensor. The algorithm on the Arduino allows the ultrasonic sensor to accurately measure the length, width, and height of underwater sediment. From the results of these measurements, sediment volume calculations can be carried out to inform the basic condition of the waters.

This research designing device to detect sediment volume in the rivers using an ultrasonic sensor equipped with a motor as a driver and an Arduino as a microcontroller to accurately detect the size of sedimentation.

Received: November 21, 2023; Revised: December 13, 2023; Accepted: January 29, 2024;
Published: January 31, 2024;

2. LITERATURE REVIEW

The study such as "Design and Build Sediment Volume Measurement Ships" discussed about A discusses sediment measurement using Arduino and infrared sensors using PID control.[1].

"Monitoring River Sediment by Optimizing Arduino Capabilities Controlled by the PID Algorithm", made a device to monitor sediment in rivers and measure their volume. The results of this research were the device can detect sediment, measure the height of the sediment, trace the sediment to measure its length, and measure the width of the sediment. By utilizing Arduino and PID Algorithm, the device can move, detect and even measure sediment accurately automatically and the measurement results show that the device can work well[2].

"Prototype of a Sediment Volume Measuring Device in the River Bed Based on Arduino Mega 2560", focusing on a prototype of a sediment volume measuring device in the riverbed that uses an Arduino Mega 2560 as a controller. This prototype is a ship shape that has been equipped with an infrared sensor to measure the volume of sedimentation by calculating the length, width, and height of the sediment. In this design, there are two dc motors equipped with a rotary encoder to regulate the movement of the sensor and calculate the size of the sediment by representing it through the rotation of the dc motor measured by the rotary encoder[3](Prasetyowati, 2021).

"Making a Water Depth Measuring Device Using Sonar Sensors" is the final project made by Citra Syefriana and Yohandri. This final project discusses the manufacture of water depth measuring devices using sonar sensors using Arduino UNO microcontrollers. The sensor used in this prototype is the JSN-SR04 sensor. The tool in this final project works by sending waves from the transmitter on the JSN-SR04 sensor, then the waves bounce back to the receiver on the JSN-SR04 sensor after hitting an object. The water depth value is assumed to be the distance of the object obtained from the processing result of the time required when the sensor sends the wave and receives it back, multiplied by the speed of the wave propagation(Syefriana & Yohandri, 2020).

"Determination of Sediment Rate in the Jatibarang Reservoir Plan" is a journal compiled by Segel Ginting and Waluyo Hatmoko. In this study, the amount of sediment entering the Jatibarang reservoir was determined. This study uses five methods to determine the value of the sediment rate entering the reservoir with reference to land erosion, empirical sediment measurement, statistical models from sediment measurement data, application of sediment equations, and mathematical models. From this study, the results obtained show that

the amount of sediment that enters the Jatibarang Reservoir plan varies depending on each method, but in terms of quantity(Ginting & Hatmoko, 2010).

In contrast to previous studies, in this study, a sediment volume measuring device was made that works automatically using an ultrasonic sensor type DYP-L04 with an Arduino Mega 2560 R3 microcontroller as the controller. The sensor is mounted on the front which is controlled by a PG45 type DC motor. With these devices, this research can produce more accurate measurement results.

3. METHODS

3.1. Sediment

Sediments play an important role in river ecosystems. They help in the formation of habitats for various aquatic organisms, as well as contribute to the nutrient cycle. However, excess sediment, which often results from deforestation or construction, can cause problems such as silting of rivers, deterioration of water quality, and disruption of aquatic life.

In river management, it is important to monitor and manage sediments so that they do not cause negative impacts on the environment and infrastructure. Therefore, the study of sediments in rivers is very important to maintain the balance of the ecosystem and avoid natural disasters such as floods or excessive erosion. Facing land limitations, it is important to make optimal use of these resources for the sustainability of their use in the future(Satriadi, 2012).

3.2. Ultrasonic Sensor DYP-L04

The DYP-L04 sensor is a type of ultrasonic sensor specifically designed for use in water. With advantages such as small physical size, small blind spot, high accuracy, and good waterproof performance, the DYP-L04 sensor can accurately measure the distance of objects in the water. In this research, a DYP-L042MTW-V1.0 type product module with a UART output with a distance of 2 cm to 300 cm was used. In UART, the data transmission rate (or often called the Baud Rate) and the clock phase on the transmitter and receiver sides must be synchronized(Tempongbuka et al., 2015). This type of product is suitable for use with Arduino microcontrollers as needed in this research.

Like ultrasonic sensors in general, the working principle is based on the reflection of sound waves with a specific frequency. The sensor measures the distance by continuously receiving the sound waves reflected by the object, and calculates the time difference between the emitted and received sound waves. This is done by comparing the reflection time with the distance or height of the object, which is a solid substance(Wicaksana & Nuha, 2022).

3.3. Arduino Mega 2560 R3

Arduino is an open-source, single-board microcontroller, derived from the Wiring platform, designed to facilitate the use of electronics in a variety of fields. The hardware has an Atmel AVR processor and the software has its own programming language. The source of the Arduino Mega 2560 R3 can be taken from a USB connection or can be sourced through an external power supply. External sources can be taken from the power adapter or battery(Sansury, 2016).

4. RESULTS AND ANALYSIS

This research began with a literature study to study theories related to the design and manufacture of tools. Journals, final project reports, books, and e-books in the form of hardcopies and softcopies from the internet are used as references. After gathering references from various sources, the next step is to design a tool that includes hardware assembly and electronic circuits. Then, insert the Arduino program into the hardware so that it becomes a sediment volume measurement tool.

Furthermore, the tool is tested based on the data that has been programmed to ensure that the tool can function as intended. Initial testing is carried out in the aquarium to evaluate performance, and then continued with testing in the pond to assess the performance of the equipment in conditions similar to the river. If the test results are not suitable, an evaluation will be carried out on the electronic components, programs and other features. However, if the tool is working properly, the next stage is to acquire, analyze, and monitor the data generated by the tool at regular intervals.

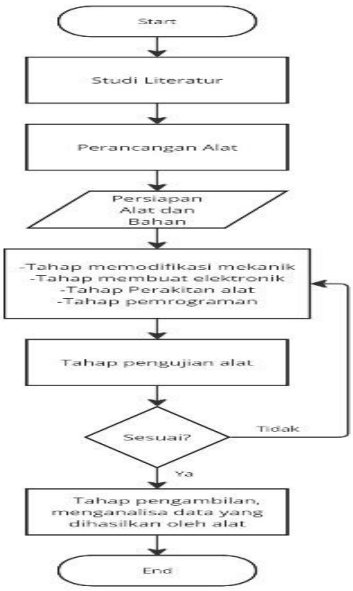

Picture 1. Research Flow Chart

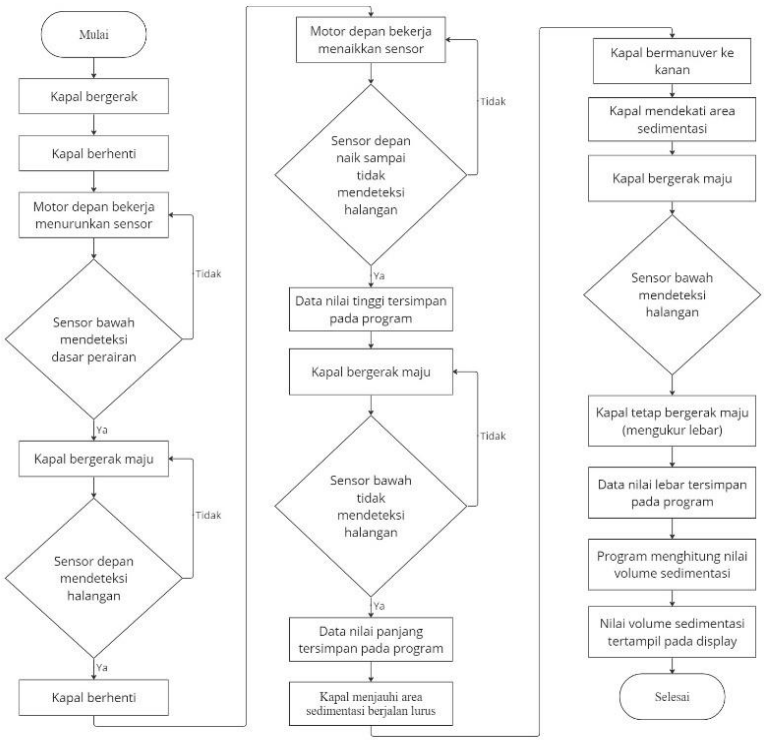

Picture 2. Flowchart Workflow Device

4.1. Tool Planning

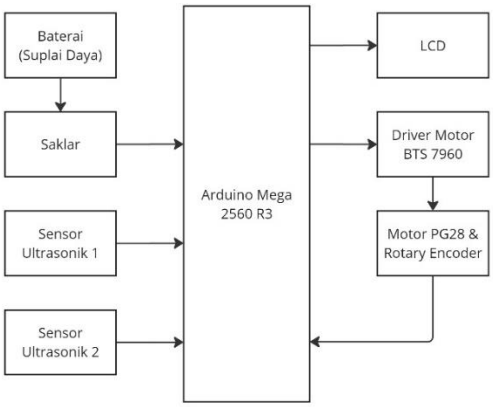

Picture 3. Network Block Diagram

Shown a block diagram of the final project tool design. The design of this tool consists of three parts, namely input, process, and output. At the input there is a power supply that supplies voltage to the electronic components attached to the device.

At the input there is an ultrasonic sensor that functions as a resistance detector in the form of sedimentation. There are two ultrasonic sensors used to measure the volume of sedimentation. These ultrasonic sensors are placed on pipes with parallel mounting, where one sensor is facing forward and one sensor is facing down. This section of pipe is placed under

the vessel with a rope as a connecting medium as the pipe is raised and lowered. In addition, there is a rotary encoder sensor installed on the PG45 motor.

The process part is in the form of an Arduino Mega 2560 microcontroller. All information or data from the sensor readings will be processed by the microcontroller. The process stage is the most important stage because at this stage the sensor readings will be processed to produce the appropriate output. The ultrasonic sensor uses a digital pin connected to the Arduino Mega 2560 R3 microcontroller.

Then the output part consists of I2C LCD, BTS7960 motor driver, PG45 motor. Once the information or data from the sensor readings is processed by the microcontroller, the microcontroller will execute commands to run the output. The I2C LCD displays information in the form of sedimentation height values, sedimentation length, sedimentation width, and sedimentation volume. The LCD used in this study is a 20x4 I2C LCD. The use of a 20x4 I2C LCD is intended to be able to display data in 4 rows and 20 columns. With the addition of I2C, the cable required can be saved as it only requires two cable paths (SDA and SCL) plus VCC and Ground. The motor driver BTS7960 used as an amplifier because the output voltage and current of the microcontroller are not able to meet the voltage and current requirements of the DC motor. To regulate the rotation of the motor, a FET PWM (Pulse Width Modulation) system is used. On the motor driver, BTS7960 is connected to the PG45 motor using pin R_PWM and pin L_PWM to the Arduino Mega 2560 R3.

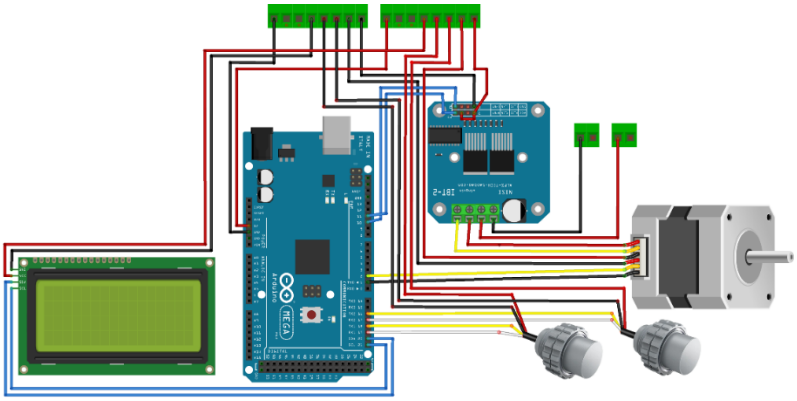

Picture 4. Wiring Diagram of Sediment Measuring Tool

4.2. Tool Testing

Sediment volume analyzer testing includes Sensor Testing, Program Testing, and Overall Testing. In the initial test, a sensor test was carried out on water and its accuracy. The sensor used in this test is an ultrasonic sensor type DYP-L04. After successful testing, the sensor is connected to a PG45 motor used for the ascent and descent of the appliance.

Furthermore, program testing is carried out to find out if the program is in accordance with what is cooled. That is, it reads the height, length, and width which are then converted to volume values and displayed on the LCD layer.

Then the last one, namely the testing of all sensors, programs, and actuators, is expected to be able to accurately measure the volume of sediment.

Picture 5. Tool Testing

In this study, the DYP-L04 Sensor was first tested for its accuracy in reading distances. Furthermore, testing is carried out to measure height, length, width and volume on objects. This test was carried out in an aquarium with a length of 96 centimeters, a width of 53.7 centimeters and a height of 55 centimeters. This aquarium contains water up to a height of 38 centimeters. With an object measuring 12 centimeters high, 19.8 centimeters long and 9.9 centimeters wide.

5. DISCUSSION

5.1. DYP-L04 Sensor Test Results

Table 1. Sensor A Test Results

No.	Natural Distance	Sensor A Measurement Results	*Error*
1.	20 mm	20 mm	0%
2.	50 mm	50 mm	0%
3.	100 mm	100 mm	0%
4.	150 mm	150 mm	0%
5.	200 mm	200 mm	0%
6.	250 mm	250 mm	0%
7.	300 mm	300 mm	0%
8.	350 mm	350 mm	0%
9.	400 mm	400 mm	0%
10.	500 mm	500 mm	0%
Average			0%

Table 2. Sensor B Test Results

No.	Natural Distance	Sensor B Measurement Results	*Error*
1.	20 mm	20 mm	0%
2.	50 mm	50 mm	0%
3.	100 mm	100 mm	0%
4.	150 mm	150 mm	0%
5.	200 mm	200 mm	0%
6.	250 mm	250 mm	0%
7.	300 mm	300 mm	0%
8.	350 mm	350 mm	0%
9.	400 mm	400 mm	0%
10.	500 mm	500 mm	0%
Average			0%

5.2. Sediment Volume Measurement Test Results

Table 3. Sediment Height Measurement Results

No.	Sediment Height	Sediment Height Measurement Results	*Error*
1.	12 cm	11.5 cm	4.16 %
2.	12 cm	8.9 cm	25.8 %
3.	12 cm	11.5 cm	4.16 %
4.	12 cm	11.9 cm	0.83 %
5.	12 cm	14.0 cm	16.6 %
6.	12 cm	10.1 cm	15.8 %
7.	12 cm	12.2 cm	1.6 %
8.	12 cm	11.0 cm	8.3 %
9.	12 cm	9.0 cm	25 %
10.	12 cm	11.9 cm	0.83 %
Average		11.2 cm	7.75 %

Table 4. Sediment Length Measurement Results

No.	Sediment Length	Sediment Length Measurement Results	*Error*
1.	19.8 cm	29.7 cm	50 %

2.	19.8 cm	23.0 cm	16.1 %
3.	19.8 cm	16.6 cm	16.1 %
4.	19.8 cm	26.4 cm	33.3 %
5.	19.8 cm	19.0 cm	4 %
6.	19.8 cm	20.0 cm	1 %
7.	19.8 cm	13.0 cm	34.3 %
8.	19.8 cm	16.8 cm	15.1 %
9.	19.8 cm	23.0 cm	16.1 %
10.	19.8 cm	18.8 cm	5 %
Average		20.63 cm	4.1 %

Table 5. Sediment Width Measurement Results

No.	Sediment Width	Sediment Width Measurement Results	*Error*
1.	9.9 cm	8.4 cm	15 %
2.	9.9 cm	8.4 cm	15 %
3.	9.9 cm	7.0 cm	29 %
4.	9.9 cm	9.8 cm	1 %
5.	9.9 cm	8.4 cm	15 %
6.	9.9 cm	12.6 cm	27 %
7.	9.9 cm	9.0 cm	9 %
8.	9.9 cm	9.8 cm	1 %
9.	9.9 cm	8.8 cm	11 %
10.	9.9 cm	10.2 cm	3 %
Average		9.24 cm	6.6 %

The error value can be calculated by comparing the result of the subtraction between the reading value of the measuring instrument and the reading value of the sensor, then dividing it by the reading value of the measuring instrument and multiplying the result by 100.

Testing the sediment measurement algorithm, starting from height measurement, length measurement, width measurement, and finally volume measurement. The high error value is caused by several factors, namely the reduced communication speed of the sensors when combined into one on the microcontroller. This causes a delay that is difficult to adjust during programming and at the time of measurement cannot get such an accurate value because time has a great influence on this research. In addition, the stability of the sensor support and sensor drive are also factors. The DYP-L04 sensor is very sensitive to vibrations, when a vibration

occurs the sensor has the opportunity to measure other objects besides the sediment to be measured, thus interfering with the calculation process being carried out by the program. Here is a table of sediment volume measurements:

Table 6. Sediment Volume Measurement Results

No.	Sediment Volume	Sediment Volume Measurement Results	*Error*
1.	2352.02 cm3	2869.02 cm3	21.9 %
2.	2352.02 cm3	1719.48 cm3	26.9 %
3.	2352.02 cm3	1336.3 cm3	43.1 %
4.	2352.02 cm3	3078,768 cm3	30.8 %
5.	2352.02 cm3	2234.4 cm3	5.0 %
6.	2352.02 cm3	2545.2 cm3	8.2 %
7.	2352.02 cm3	1427.4 cm3	39.3 %
8.	2352.02 cm3	1811.04 cm3	23.0 %
9.	2352.02 cm3	1821.6 cm3	22.5 %
10.	2352.02 cm3	2281,944 cm3	2.9 %
Average		2112,515 cm3	10 %

CONCLUSION

From this is influenced study, it could be concluded that the ultrasonic sensor type DYP-L04 read well and accurately according to the specifications. The device could read the volume of sediment with the average error score less than 10 %. Future research will focus on using this device in several studies in practice and further optimize it in order to get even a lower error score.

REFERENCES

Ginting, S., & Hatmoko, W. (2010). Penentuan laju sedimen pada rencana waduk Jatibarang. *Jurnal Sumber Daya Air, 6*(1), 33–46.

Prasetyowati, S. A. D. (2021). Hybrid FLC-LMS algorithm for predicting sediment volume in the river. *International Journal of Intelligent Engineering and Systems, 14*(2), 395–409. https://doi.org/10.22266/ijies2021.0430.36

Sansury, H. (2016). Tampilan pengukuran deteksi objek dan jarak sonar ultrasonik menggunakan sensor HC-SR04 pada Arduino ATMEGA 2560. 49–57.

Satriadi, A. (2012). Studi batimetri dan jenis sedimen dasar laut di perairan Marina, Semarang, Jawa Tengah. *Buletin Oseanografi Marina, 1*(5), 53–62.

Syefriana, C., & Yohandri. (2020). Pembuatan alat ukur kedalaman air menggunakan depth meters. *Pillar of Physics, 13*(April), 1–8.

Tempongbuka, H., Kendek Allo, E., & U. A. Sompie, S. R. (2015). Rancang bangun sistem keamanan rumah menggunakan sensor PIR (Passive Infrared) dan SMS sebagai notifikasi. *Journal Teknik Elektro dan Komputer, 4*(6), 10–15.

Wicaksana, M. A., & Nuha, H. H. (2022). Prediction, monitoring, and early warning system of water levels in flood program areas in Banjarmasin using IoT and linear regression. *Jurnal Socius, 11*(2), 31. https://doi.org/10.20527/js.v11i2.14576